Milesight

2/4/5 Megapixel H.265 IR Mini Dome Network Camera

H.265+ HEVC | Starlight | Super WDR | IR | Motion Detection | Privacy Masking | 3-Axis | Mic | SD XC | PoE | Profile S/G Onvif | VCA

MS-C2983-PB/MS-C4483-PB/
MS-C5383-PB

DATASHEET

KEY FEATURES

- Smart Stream (Bandwidth, storage and bit rate save with Smart Stream ON, eg, H.265+ save 70%~80% bandwidth of H.264.)
- Smart IR II (Combining the High Beam and Low Beam to adjust IR intensity to fit different lighting conditions.)
- Advanced Functions (Boasting to support various advanced functions such as HLC, Defog, ROI.)
- Built-in Microphone (Supporting audio function to hear what is happening in front of the camera.)
- SIP (Session Initiation Protocol. Providing audio/alarm/intercom and video streaming for mobile phones and video phones.)
- 3-Axis Mechanical Design (Featuring 3-axis mechanical design for fast and easy adjustment of the camera's viewing angle.)
- 256G (Supporting ultra-large external microSD/SDHC/SDXC card storage up to 256G.)

Video Content Analysis

Milesight VCA with 10 detection modes provides advanced, accurate smart video analysis for Milesight network cameras, enabling the comprehensive surveillance function and quicker response to different monitoring scenes.

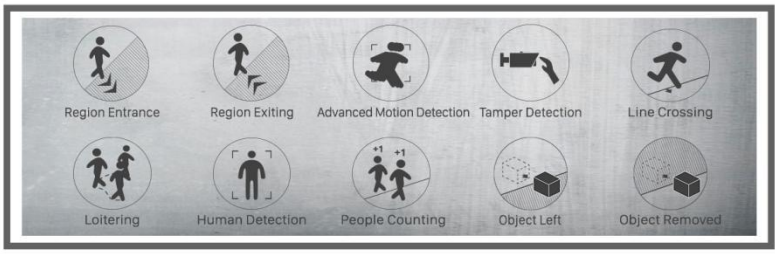

0.002Lux Ultra Low-light

The starlight camera is able to deliver high detailed color images even in low light environment reaching 0.002Lux(Color) or 0Lux(B/W), and near infrared light environments without any supplementary lighting.

140dB Super WDR

Milesight's sensor-based WDR technology allows the camera to record greater scene details with true color reproduction even under the extreme back light and high contrast conditions. The ratio that the brightest light signal values divided by the darkest light signal values is up to 140dB.

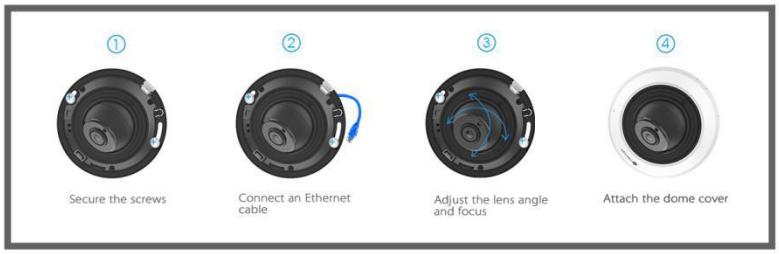

Easy Installation & Adjustment

With a built-in RJ45 port, PoE functionality and 3-axis mechanical design, the installation steps of Milesight IR Mini Dome Camera are as easy as ABC.

H.265 IR Mini Dome Network Camera

	Model	MS-C2983-PB (2MP)	MS-C4483-PB (4MP)	MS-C5383-PB (5MP)
Camera	Image Sensor	1/2.8" Progressive Scan CMOS	1/3" Progressive Scan CMOS	1/2.8" Progressive Scan CMOS
	Min. Illumination	Color: 0.002Lux@F1.2 B/W: 0Lux with IR on	Color: 0.008Lux@F1.2 B/W: 0Lux with IR on	Color: 0.005Lux@F1.2 B/W: 0Lux with IR on
	WDR	140dB Super WDR	120dB Super WDR	
	Lens	2.8mm @F2.0 / 3.2mm @F2.2 / 3.6mm @F2.2 / 6mm @F1.6		
	Mount	M12		
	Field of View	H124°/D144°/V68°(2.8mm) H108°/D126°/V58°(3.2mm) H90°/D105°/V49°(3.6mm) H57°/D65°/V32°(6mm)	H114°/D134°/V66°(2.8mm) H97°/D115°/V57°(3.2mm) H83°/D98°/V47°(3.6mm) H53°/D61°/V31°(6mm)	H113°/D143°/V83°(2.8mm) H98°/D125°/V72°(3.2mm) H81°/D104°/V60°(3.6mm) H51°/D65°/V39°(6mm)
	Shutter Time	1/100000s~1s		
	IR Distance	Up to 20m		
	Day&Night	ICR Filter Auto Switch		
Video	Max. Image Resolution	1920x1080	2592x1520	2592x1944
	Primary Stream	30fps@(1920x1080, 1280x960, 1280x720, 704x576)	20fps@(2592x1520), 30fps@(2304x1296, 1920x1080, 1280x960, 1280x720, 704x576)	20fps@(2592x1944), 30fps@(1920x1080, 1280x960, 1280x720, 704x576)
	Secondary Stream	30fps@(704x576, 640x480, 640x360, 352x288, 320x240, 320x192, 320x176)		
	Tertiary Stream	30fps@(1920x1080, 1280x720, 704x576, 640x480, 640x360, 320x240, 320x192, 320x176)		
	Video Compression	H.265+/H.265(HEVC)/H.264+/H.264/MJPEG		
	Video Bit Rate	16Kbps~16Mbps(CBR/VBR Adjustable)		
	Image Setting	Brightness/Contrast/Saturation/Sharpness		
Network	Ethernet	1*RJ45 10M/100M Ethernet Port		
	Network Storage	NAS(Support NFS, SMB/CIFS)		
	Protocol	IPv4/IPv6, TCP, UDP, RTP, RTSP, RTCP, HTTP, HTTPS, DNS, DDNS, DHCP, FTP, NTP, SMTP, SNMP, UPnP, SIP, PPPoE, VLAN, 802.1x, QoS, IGMP, ICMP, SSL		
Audio	Audio Compression	G.711/AAC		
	Audio Interface	Built-in Microphone		
System	Storage	Support microSD/SDHC/SDXC Card Local Storage, up to 256G		
	Advanced Function	Privacy Masking, Backlight Compensation, HLC, 2D DNR, 3D DNR, ROI, Anti-fog, White Balance, EIS, IP Address Filtering		
	SIP/VoIP Support	Yes, Voice & Video-over-IP		
	Event Trigger	Motion Detection, Network Disconnection, Audio Alarm, etc.		
	Event Action	FTP Upload, SMTP Upload, SD Card Record, SIP Phone, HTTP Notification, etc.		
	Video Analysis (Optional)	Region Entrance, Region Exiting, Advanced Motion Detection, Tamper Detection, Line Crossing, Loitering, Human Detection, People Counting, Object Left, Object Removed		
	System Compatibility	ONVIF Profile S & G		
General	Working Temperature	-40℃~60℃		
	Working Humidity	0~90%(Non-condensing)		
	Power Supply	PoE (802.3af)		
	Power Consumption	3.5W MAX 5W MAX (With IR on)	4W MAX 5.5W MAX (With IR on)	
	Weight	200g		
	Dimensions	Φ97.8mmX57.9mm		
	Warranty	3/5 Years		

V7.15

H.265 IR Mini Dome Network Camera

Structure Diagrams

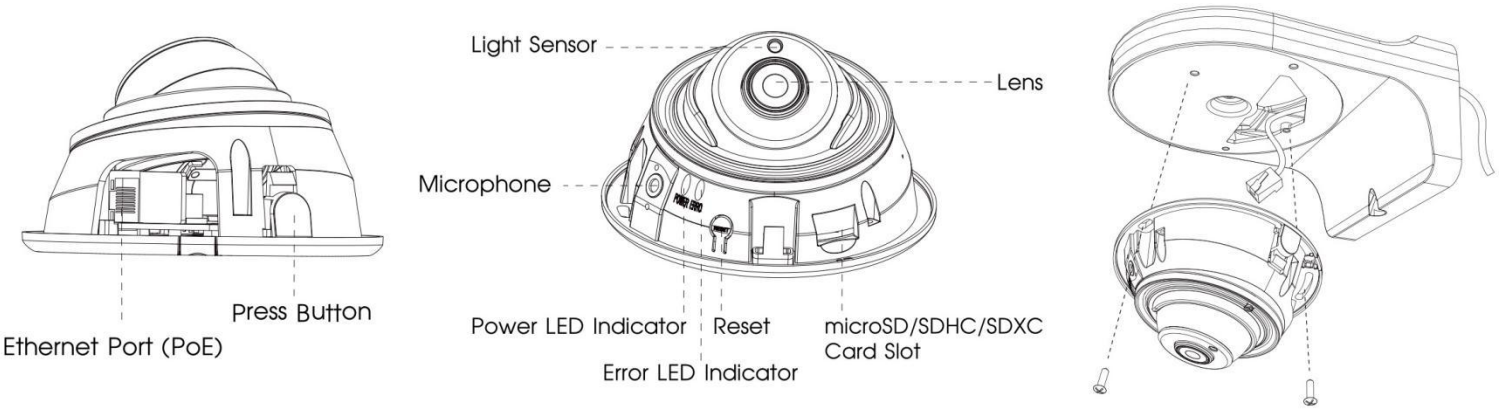

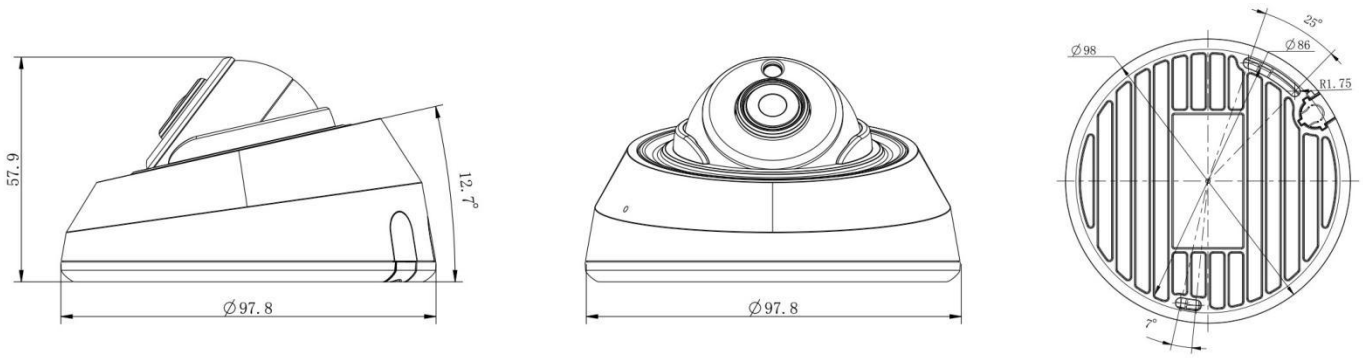

Units: mm

Accessories Support

A01 Pole Mount

Weight: 720g
Dimensions: 170*51.5*152.6mm

A02 Internal Corner Bracket

Weight: 540g
Dimensions: 170*23.2*205.3mm

A03 External Corner Bracket

Weight: 900g
Dimensions: 170*152.6*76.3mm

A71 Wall Mount

Weight: 531g
Dimensions: 162*124*78 mm

Naming Convention

MS-C	2	9	83-	PB
	2 - 2MP (4 - 4MP/5 -5 MP)	Sensor	IR Mini Dome	PoE+H.265

Milesight Technology Co.,Ltd. | www.milesight.com

Contact Us: sales@milesight.com support@milesight.com

Add: 220 NE 51st Street, Oakland Park, Florida 33334, USA
Tel: +1-800-561-0485

Add: 925, Anyang SK V1 Center, LS -ro 116beon-gil, Dongan-gu, Anyang-si, Korea
Tel: +82-31-990-7772

Add: No.23 Wanghai Road, 2nd Software Park, Xiamen, China
Tel: +86-592-5922772